Register - Sram implementation

Summary:

Throughout this assignment I implemented General purpose registers(GPR), Program counter(PC), Instruction register(IR), 8-bit SRAM, all using digital.

General Purpose Rgisters(GPR):

- I created four 8-bit registers
- A decoder is used to enable signals for the registers.
- A clock input that was wired to all four registers.

Program Counter(PC):

- An 8-bit adder adds the current PC value with 1 to move to the next instruction.
- The PC updates its value based on the system clock.
- A MUX chooses between the incremented value or a value being loaded in.
- The PC_INC signal decides if the PC should increase or not.

Instruction register (IR):

- Clock input
- Input connected to D
- Control signal

SRAM:

- Uses 4 bits for the address, allowing 16 total locations
- Uses 8 bits to store data in each memory location
- Uses control signals:
    - CS (Chip Select) to turn the memory on
    - WE (Write Enable) to store data
    - OE (Output Enable) to read data from memory

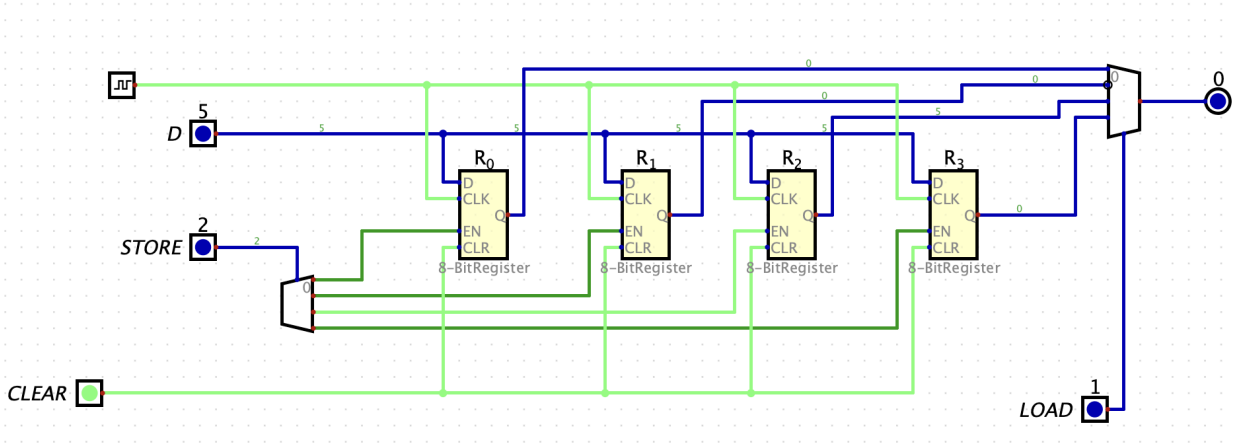
D
5
STORE
2
CLEAR
R0
R1
R2
R3
D
CLK
Q
EN
CLR
8-BitRegister
0
LOAD
1

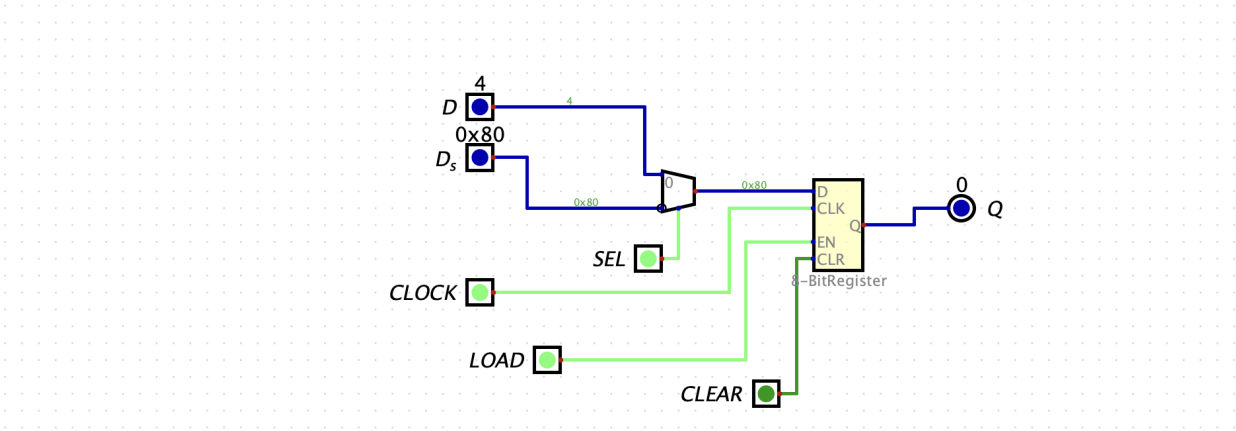
D
4
0x80
Ds
SEL
CLOCK
LOAD
CLEAR
D
CLK
Q
EN
CLR
8-BitRegister
0
Q

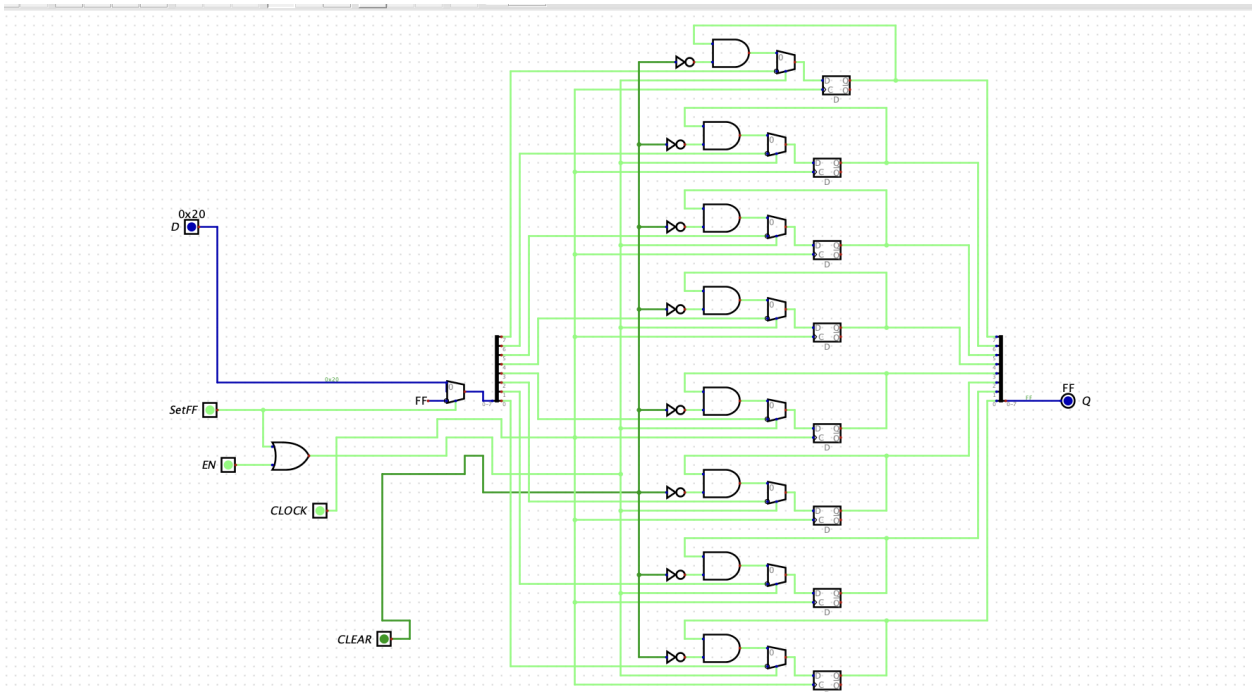
0x20
D
SetFF
EN
CLOCK
CLEAR
FF
FF
Q

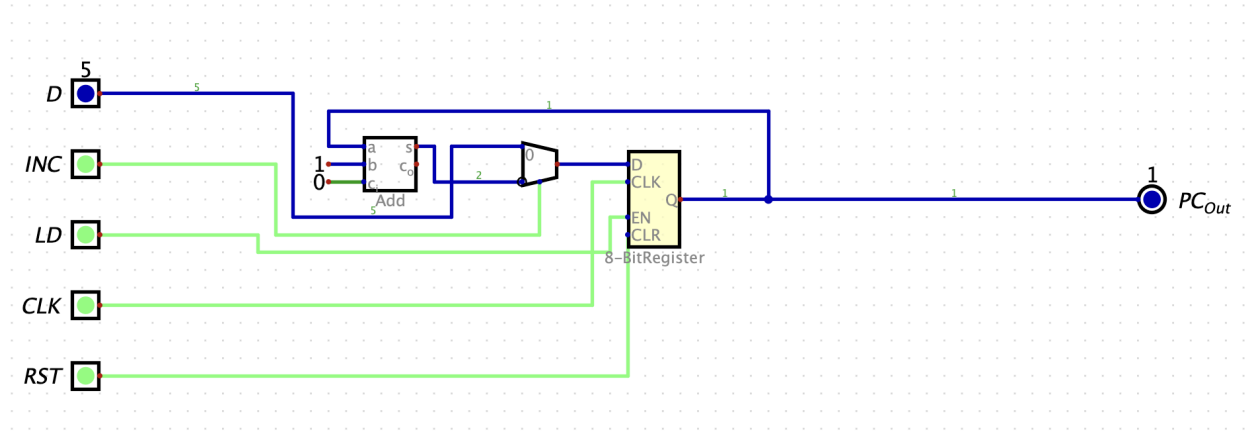
5
D
INC
LD
CLK
RST
1
0
a
b
c
s
c0
Add
0
D
CLK
EN
CLR
Q
8-BitRegister
1
PCOut